HERON

UNIVERSAL CORNER SOFA

ASSEMBLY INSTRUCTION

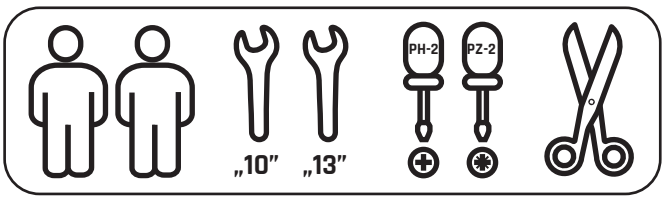

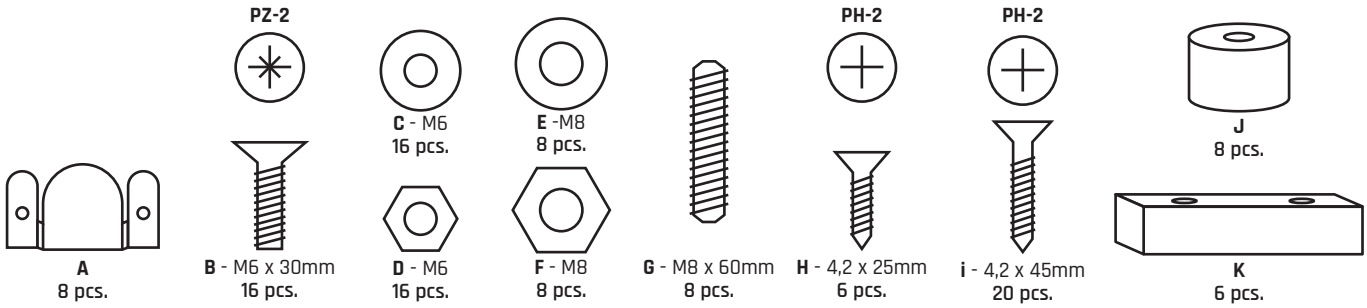

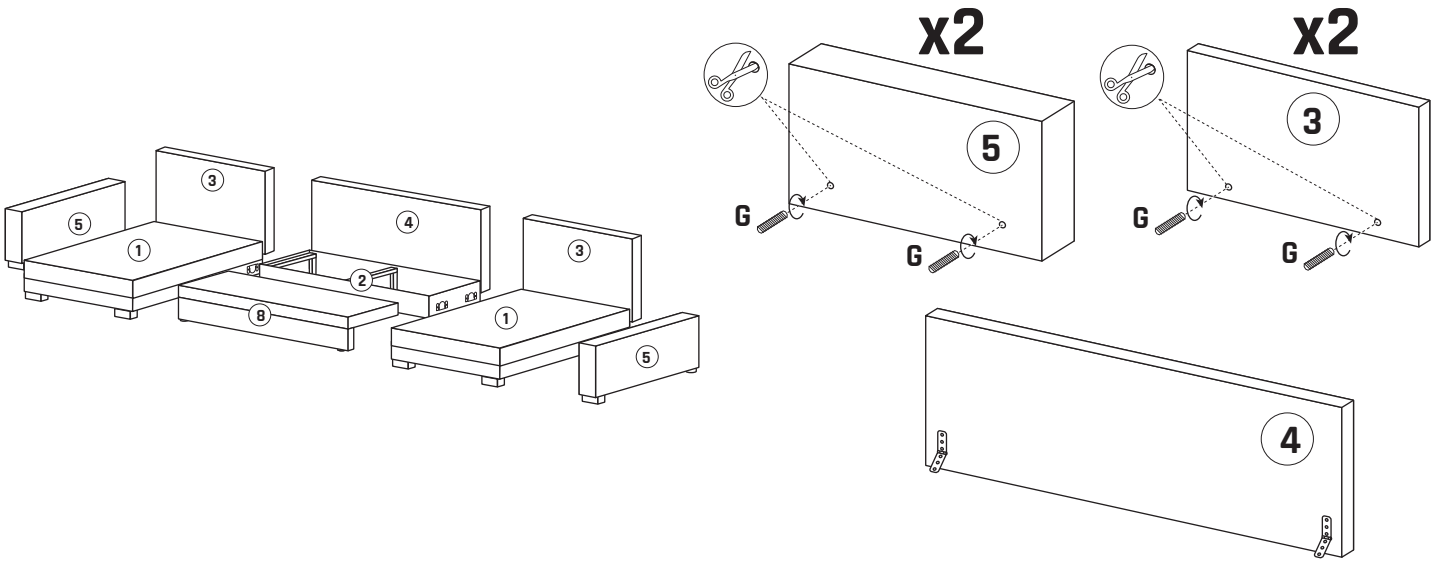

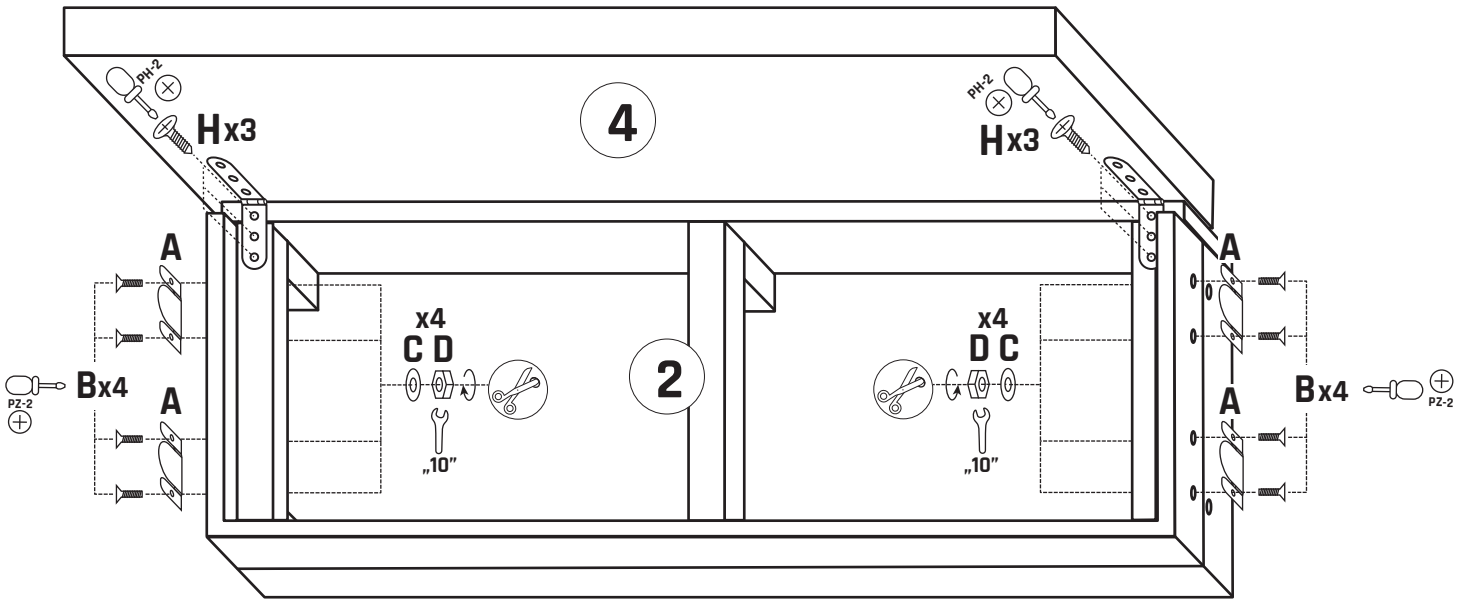

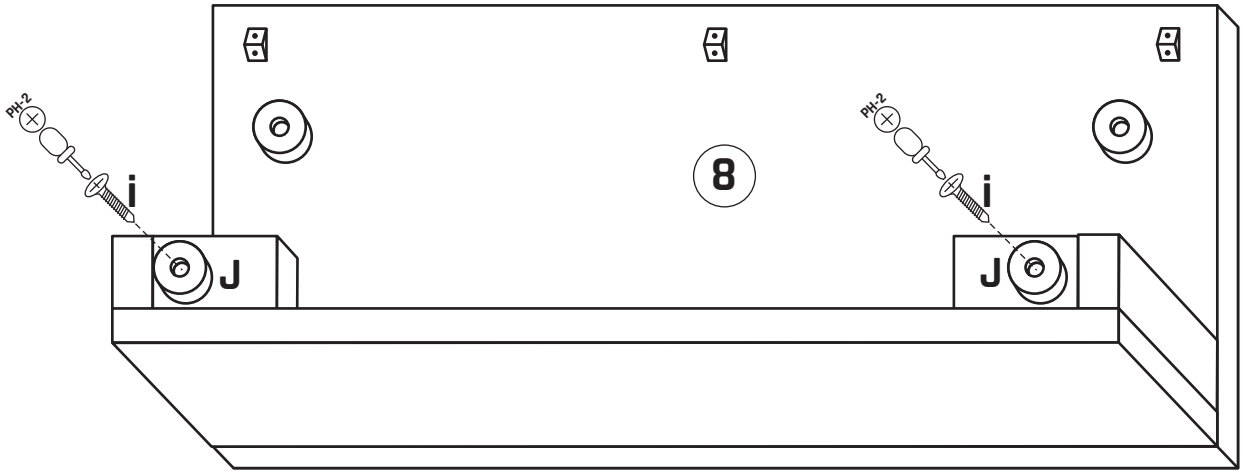
PH-2
i
J
8
PH-2
i
J

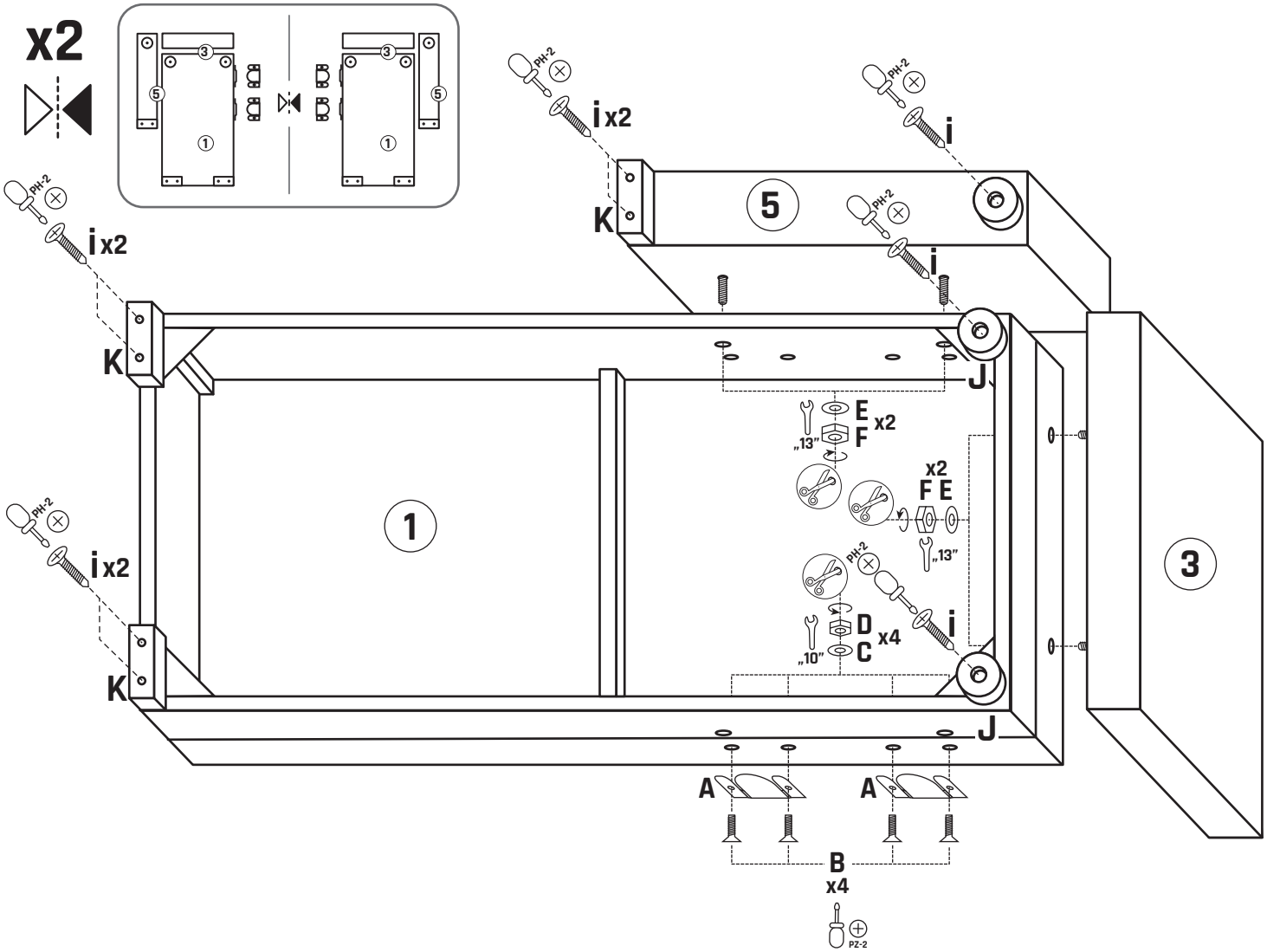
x2
3
5
1
3
5
1
PH-2
i x2
K
PH-2
i x2
K
PH-2
i x2
K
PH-2
i x2
K
5
PH-2
i
PH-2
i
J
J
E
F
x2
„13"
x2
F E
„13"
1
3
PH-2
i
D
C
x4
„10"
A
A
B
x4
PZ-2

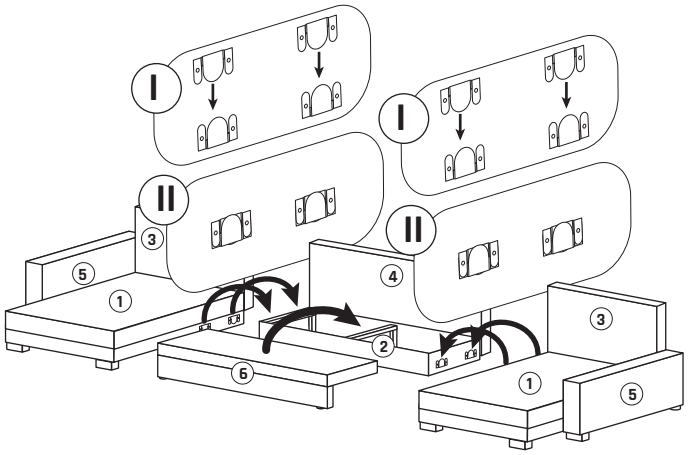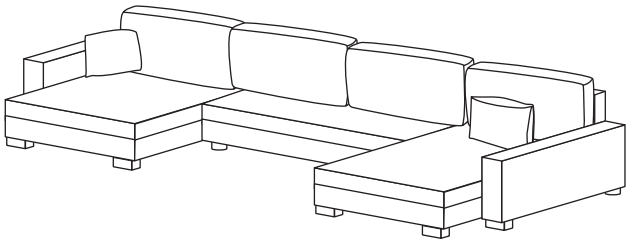
I
I
II
II
3
5
1
4
2
6
3
1
5